SL1009 OUTDOOR

Technical specifications

Lifting cap. arm in/out	1000/280kg – 2200/620lb
Lifting height	4,65m / 15,26ft
Extension of arm	830+830mm / 2,72+2,72ft
Tilt	44° back / 80° fwd
Side shift	100mm / 4in
Charging voltage	230V / 110V
Charging time	Approx. 8 hrs.
Running period	Up to 10 hrs.
Front-wheel drive	2500W
Width	1,02m / 3,35ft
Suction pads	6xØ400mm / 6x16in
Curb weight	1480kg / 3260lb

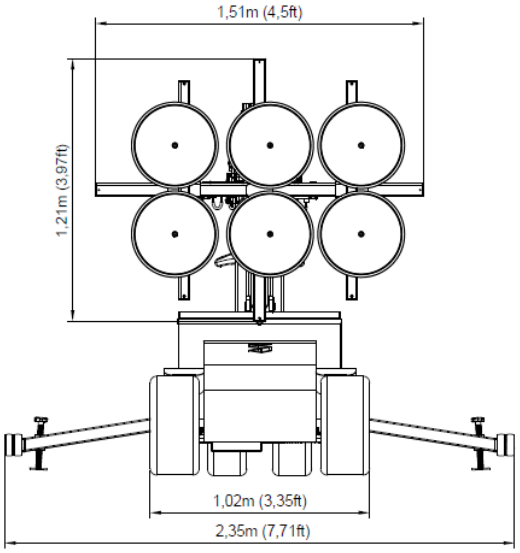

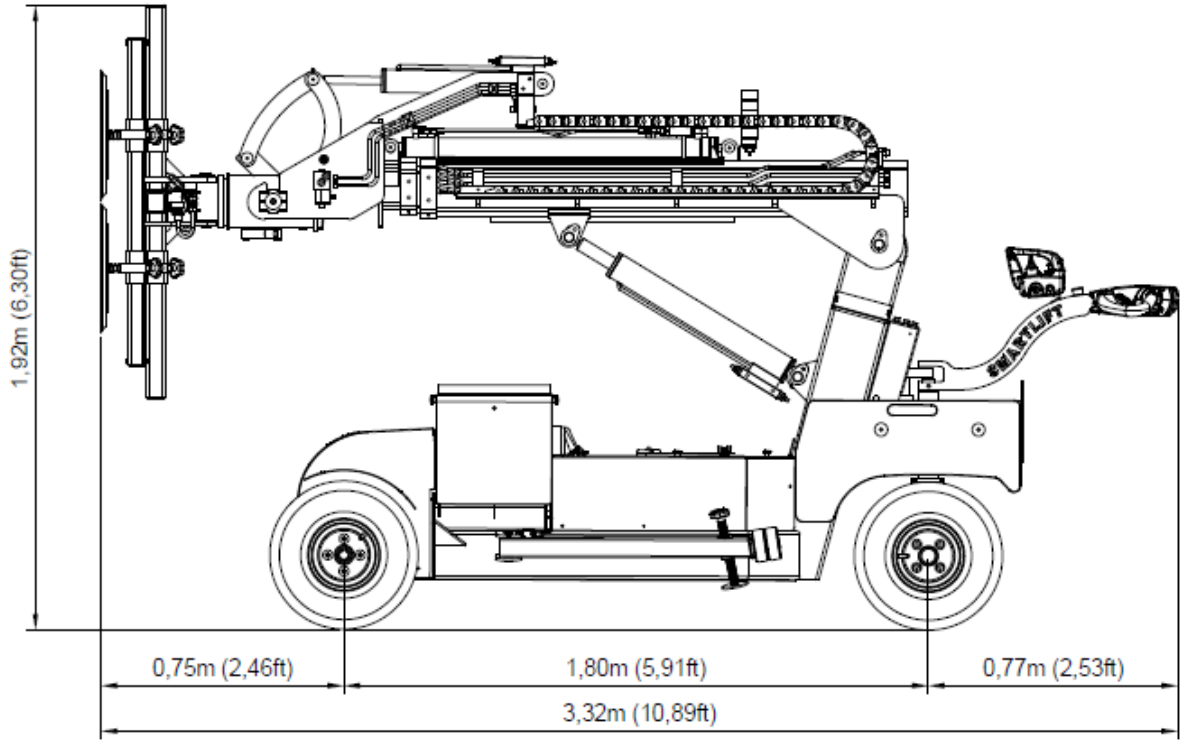

Load chart

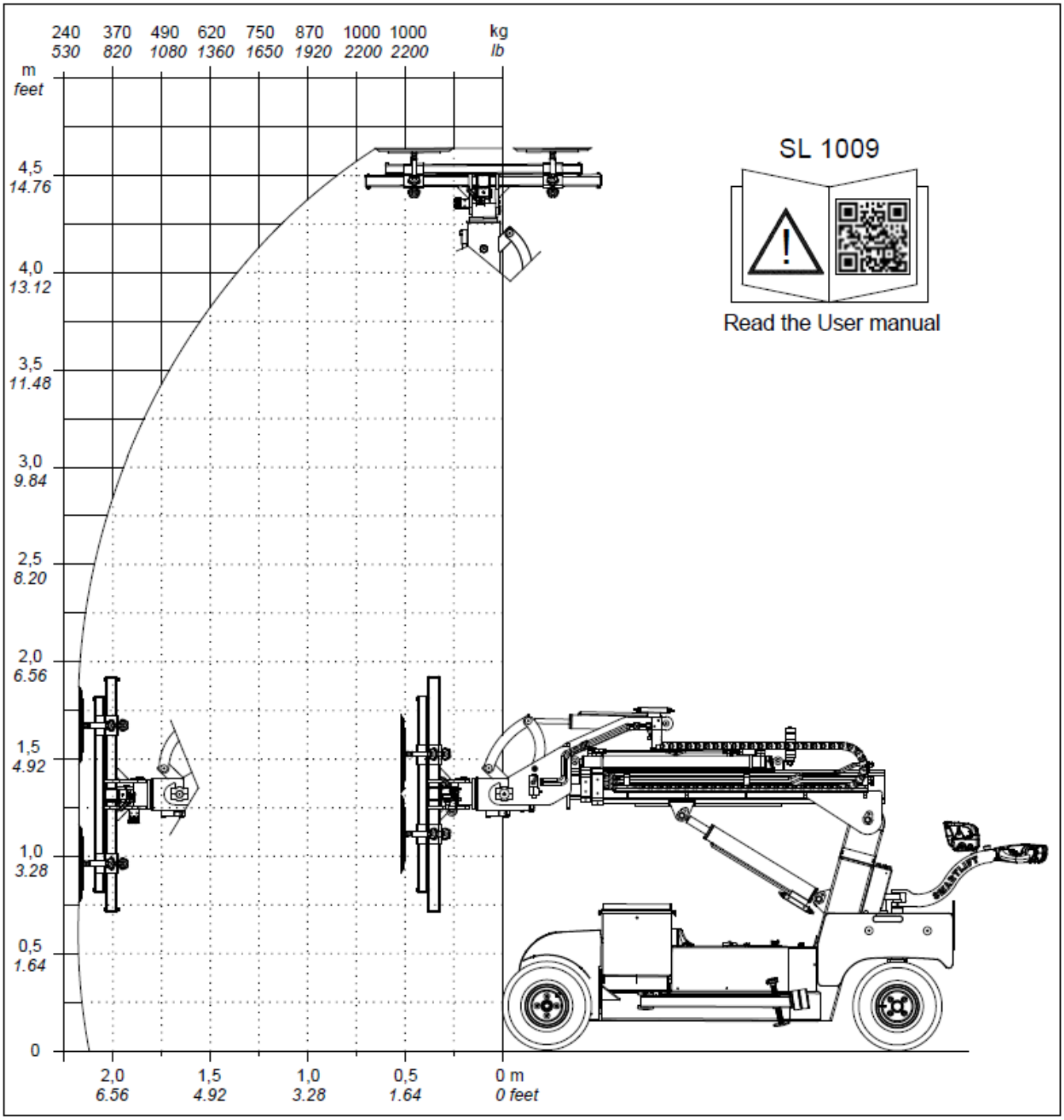
240 370 490 620 750 870 1000 1000 kg
530 820 1080 1360 1650 1920 2200 2200 lb
m
feet
4,5
14.76
4,0
13.12
3,5
11.48
3,0
9.84
2,5
8.20
2,0
6.56
1,5
4.92
1,0
3.28
0,5
1.64
0
2,0
6.56
1,5
4.92
1,0
3.28
0,5
1.64
0 m
0 feet
SL 1009
Read the User manual